Patriot Single Tank

Product Manual

www.diamondh20 | 800-236-8931 | N1022 Quality Drive, Greenville WI 54942

Set Up Instructions for DCS6-Series Single Tank

Inspect the packaging of the equipment to confirm that nothing was damaged during shipping. (Figure 1)

Figure 1: Original Packaging of DCS6 Twin Tank System
This is how the packages will generally arrive

Remove the resin tank(s) and valve(s) from the packaging. Make sure everything is included and without damage. Notice that the valve(s), Brine Line 'T', brine line hose, and MAV valve will be found in the brine tank. Below is a checklist with everything you should have received.

_____ 1) Control Valve
(Figure 2)

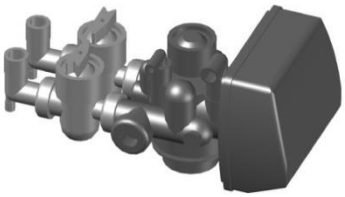

Figure 2: Control Valve

_____ 2) Brine Tank (Figure 4)
_____ 3) Brine Line Hose (Figure 6)
_____ 4) Softener Tank (Figure 5)

Figure 4: Brine Tank

Figure 5: Softener Tank

Figure 6: Brine Line Hose, Control valve packaging, Brine Line 'T' (in bag)

_____ 5) Correct Amount of Gravel (from Model and Media Requirements Table on page 2)
_____ 6) Correct Amount of Resin (from Model and Media Requirements Table on page 2)

Call Diamond H2O right away if anything is missing. Contact the freight company **immediately** if anything is damaged. Diamond H2O will not be liable for any damage received after shipping.

Packaged By: _____ Date: _____

Received By: _____ Date: _____

Table 1: Media Requirements.

Example: A DCS6-210-150 would require 7 cubic feet of resin and 100 pounds of gravel per tank.

Model Number	Amount of Resin per Tank (cu. ft.)	Amount of Gravel per Tank (pounds)
DCS6-24-xxx	0.8	6
DCS6-30-xxx	1	10
DCS6-45-xxx	1.5	15
DCS6-60-xxx	2	25
DCS6-75-xxx	2.5	25-30
DCS6-90-xxx	3	30-35
DCS6-120-xxx	4	55
DCS6-150-xxx	5	80
DCS6-180-xxx	6	100
DCS6-210-xxx	7	100
DCS6-240-xxx	8	175
DCS6-270-xxx	9	175
DCS6-300-xxx	10	175
DCS6-450-xxx	15	250
DCS6-600-xxx	20	350
DCS6-750-xxx	25	650
DCS6-900-xxx	30	650
DCS6-1200-xxx	40	900

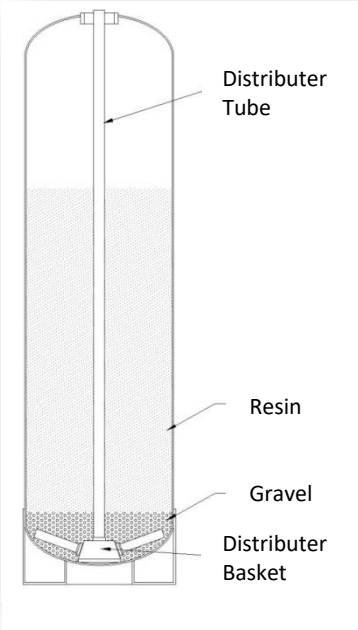

NOTE: Bags of gravel should be marked with a tag showing whether they belong to the brine tank or the softener tank.

Model Number	Control Valve Inlet and Outlet Size (in)
DCS6-xxx-100	1
DCS6-xxx-125	1.25
DCS6-xxx-150	1.5
DCS6-xxx-200	2
DCS6-xxx-300	3

Table 2: Valve Sizes

Example: The valve for a DCS6-210-150 has an inlet and outlet size of 1.5 inches.

Table 3: Spare Parts List

Item	Part Number
Battery, 3 volt lithium coin cell	Type 2032
Motor Assembly	82-0022-XX
PC Board 4-Digit	V3818TC
AC Adaptor 110V-12V	66-0005-XX
O-ring 228	V3135
O-ring 337	V3180
O-ring 215 (for 1" distributor tube)	V3105
O-ring 219 (for 1.32" distributor tube)	V3358
Blue Funnel (For 2.5" diameter tanks)	97-0014-PL
Black Funnel (For 4.0" diameter tanks)	97-0015-PL

1. **Obtain the required tools listed below:**
   A. Utility Knife
   B. Pliers
   C. Phillips Screwdriver
   D. Hammer

2. **Place the tanks near a water source.**
   A. Select a position near a floor drain that has adequate carrying capacity to handle the backwash flow rate. Refer to the specification Table in Section 8 for the appropriate flow rate.
   B. Place the softener(s) and brine tank on a level, firm foundation, like concrete.
   C. **Determine the "front" of each tank** received. For each tank:
      a. Make sure that the distributer riser is flush with the top of the resin tank.

      b. Before placing any water, gravel, or resin in the resin tank, screw in a control valve to the point where it is secure. The valve does not need to be forced on, but should be snug.

      c. The two tanks should be placed next to each other, with the brine tank off to the side. The correct distance between the two tanks can be determined by connecting the MAV to both valve outlets.

      d. Mark the "front" of each resin tank (shown in Figure 7) with either a marker or tape. The front of the resin tank is determined by the location of the face of the control valve once it has been secured to the face of the control valve. Make sure that the system is positioned in a way that the plumbing can be installed.

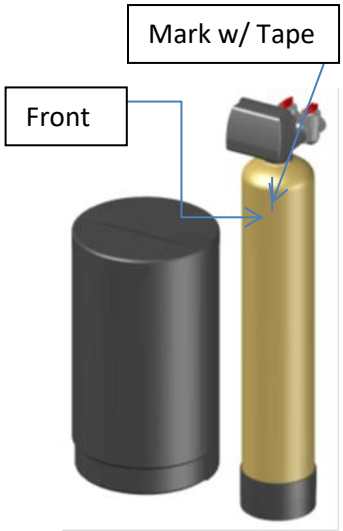

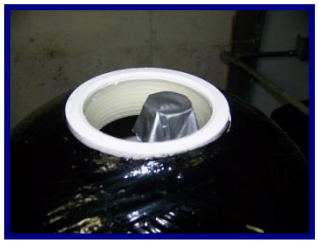

Figure 8: How to Block Distributer Tube

   D. ***Before Filling the Tanks***:
      a. Remove the valve(s)
      b. Ensure that the front(s) of the tank(s) is/are positioned correctly. Once filled, the resin tanks will be very difficult to move.
      c. Cover the exposed end of the distributor riser(s) to make sure no resin gets inside. Covering up the riser(s) with duct tape is one option, shown in Figure 8.
      d. Obtain a funnel to assist placing the resin in the resin tanks. (A funnel designed specifically for our resin tanks can be ordered from Diamond H2O Conditioning. The part numbers for the two types of funnels are table 3.)

3. Setting up the tank:

A. Fill the tank up to 30% full of water.

B. Check the system specifications on page 2 to determine the correct amount of gravel and resin needed for your system.

C. Position the distributor tube so it is in the center of the tank, shown in Figure 8.

Figure 9: Centered Distributer Tube

D. **SLOWLY**, pour the correct amount of support gravel into the tank without getting any gravel into the distributer tube.

a. CAUTION: The distributor system is made of PVC and will break if the gravel is poured in too quickly.

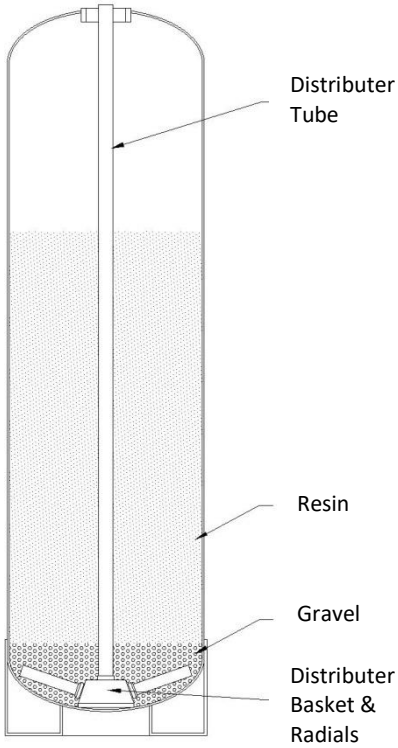

Figure 10: Resin Tank Diagram

E. Visually confirm that the gravel is level and covering the distributor basket and radials, if it is not, contact Diamond H2O Conditioning.

F. **SLOWLY**, pour the correct amount of resin into the tank. Again, try to keep the media level by carefully rocking the tank back and forth.

G. Fill the rest of the tank with water to prevent air from getting in the tanks and potentially losing media.

H. Verify that there is a large O-ring on the control valve(s) adapter base.

I. Place the control valve on the tank, making sure that the distributor tube fits into the bottom of the control valve.

J. Tighten the control valve onto the tank to the point that it is snug. The finished tank is shown in Figure 11.
Double check that the valve is in a correct position to be able to install the plumbing.

4. Connect the brine tank.

A. Remove the ties on the brine line hose (included in the brine tank).

B. Remove the well cap and connect one end of the brine line hose to the brine line connection (Shown in Figure 12) of the brine tank. Tighten the brine line hose to the brine line connection by turning the cap of the brine line connection clockwise by hand. Make sure that no air can get into the line, or the softener will not regenerate properly.

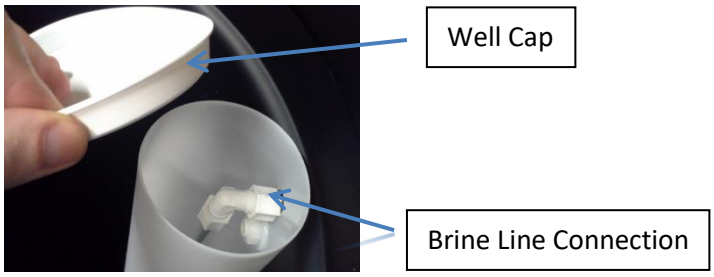

Figure 11: Brine Well Picture

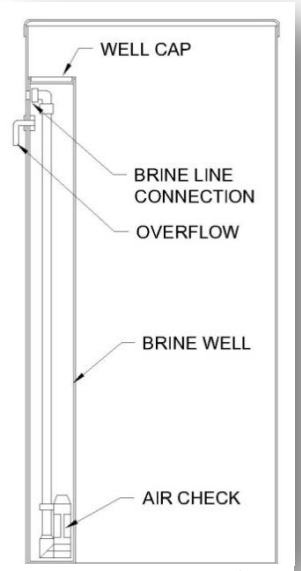

Figure 12: Brine Tank

C. A red latch with a Polytube insert attached is placed under the brine inlet of each valve. Place this insert in the brine line before connecting it to the brine inlet. (Figure 14)

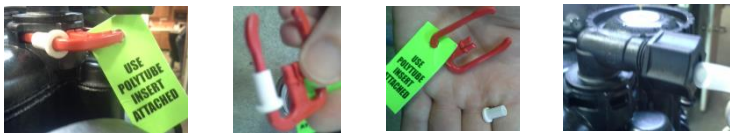

Figure 13: Installing Brine Line Polytube

Tighten all connections using a wrench and tightening the caps clockwise.

D. Safely dispose of any leftover tubing.

E. Fill the brine tank with salt.

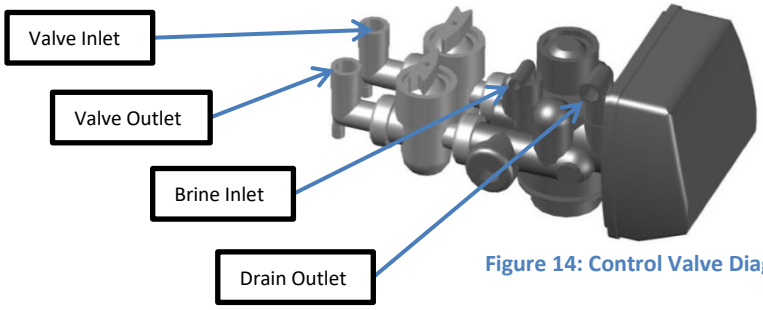

Figure 14: Control Valve Diagram

5. Connect the Valves to the Water Source

A. Pipe or tube a line from the Control Valve Drain (Figure 14) to the drain. Refer to section 9 for the proper sized drain line.

DO NOT

- install a valve in this line
- use a pipe smaller than the valve sizes listed on section 9
- make a direct connection to the drain
  - Provide an air gap at least four times the diameter of the drain pipe to conform to sanitation codes and be able to observe the drain flow.
- use an excessive amount of elbows in the plumbing

B. Connect the facility plumbing to the control valve inlet and outlet following all local codes.

Note: Make sure all piping is free of thread chips and other foreign matter.

6. Start up the system for the first time.

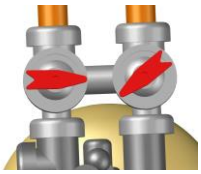

Figure 15: Opening bypass valve's inlet

A. Add about three gallons of water to the brine tank.

B. Make sure the tanks are filled with water.

a. Manually put the control valve into regeneration (Hold the regen button)

b. A mixture of air and water will flow from the drain line.

c. Slowly open the bypass valve's inlet to allow water to slowly enter the tank. (shown in figure

d. Once the tank is filled, only water will be coming out of the drain line. Put the system back into bypass operation. Run each step of the regen cycle (Figure 21) for a few minutes.

C. Program the Valve. Most of the settings were pre-programed by Diamond H2O. The installer must enter the installer settings shown in part 8 section C of this manual.

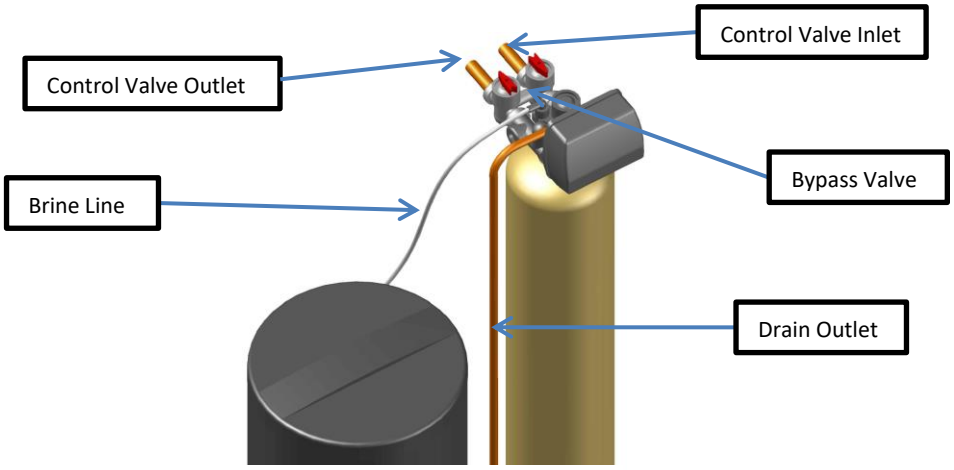

Figure 16: Finished System

7. Bypass Valve Operations

A. The red controls of the bypass valve can be turned 90° resulting in four modes of operation.

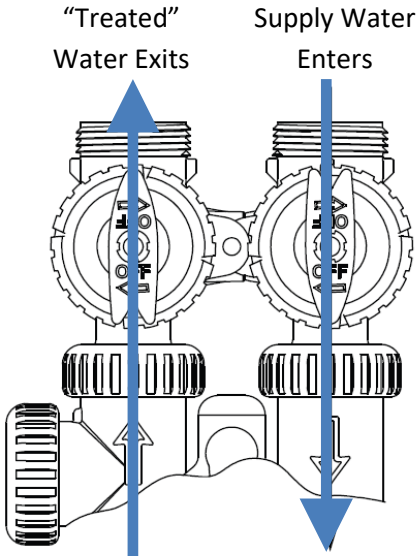

Figure 17: Normal Operation

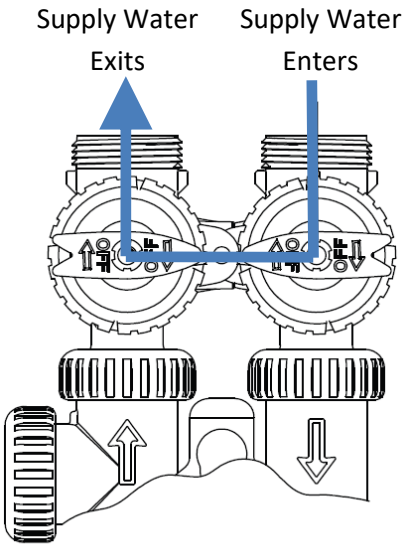

Figure 18: Bypass Operation

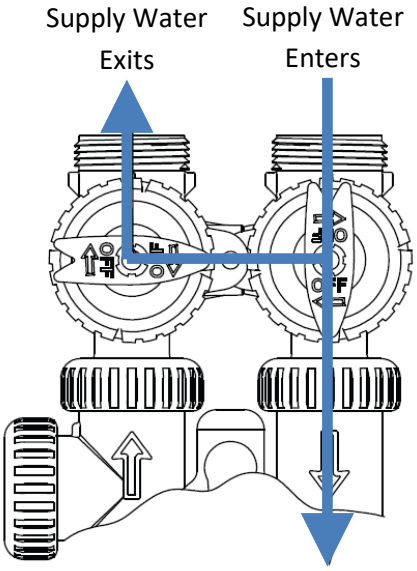

Figure 19: Diagnostic Mode

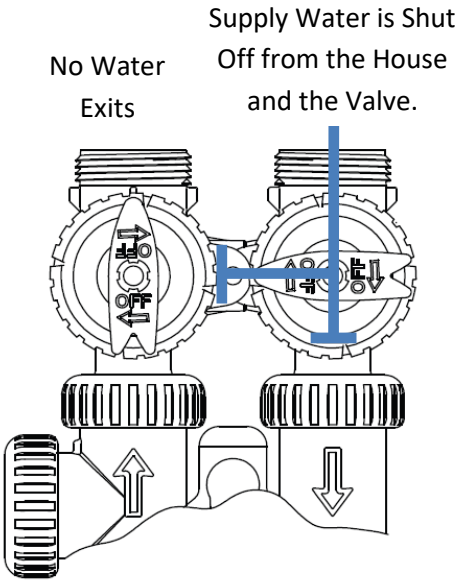

Figure 20: Shut Off Mode

Figure 21: General Softener Operations

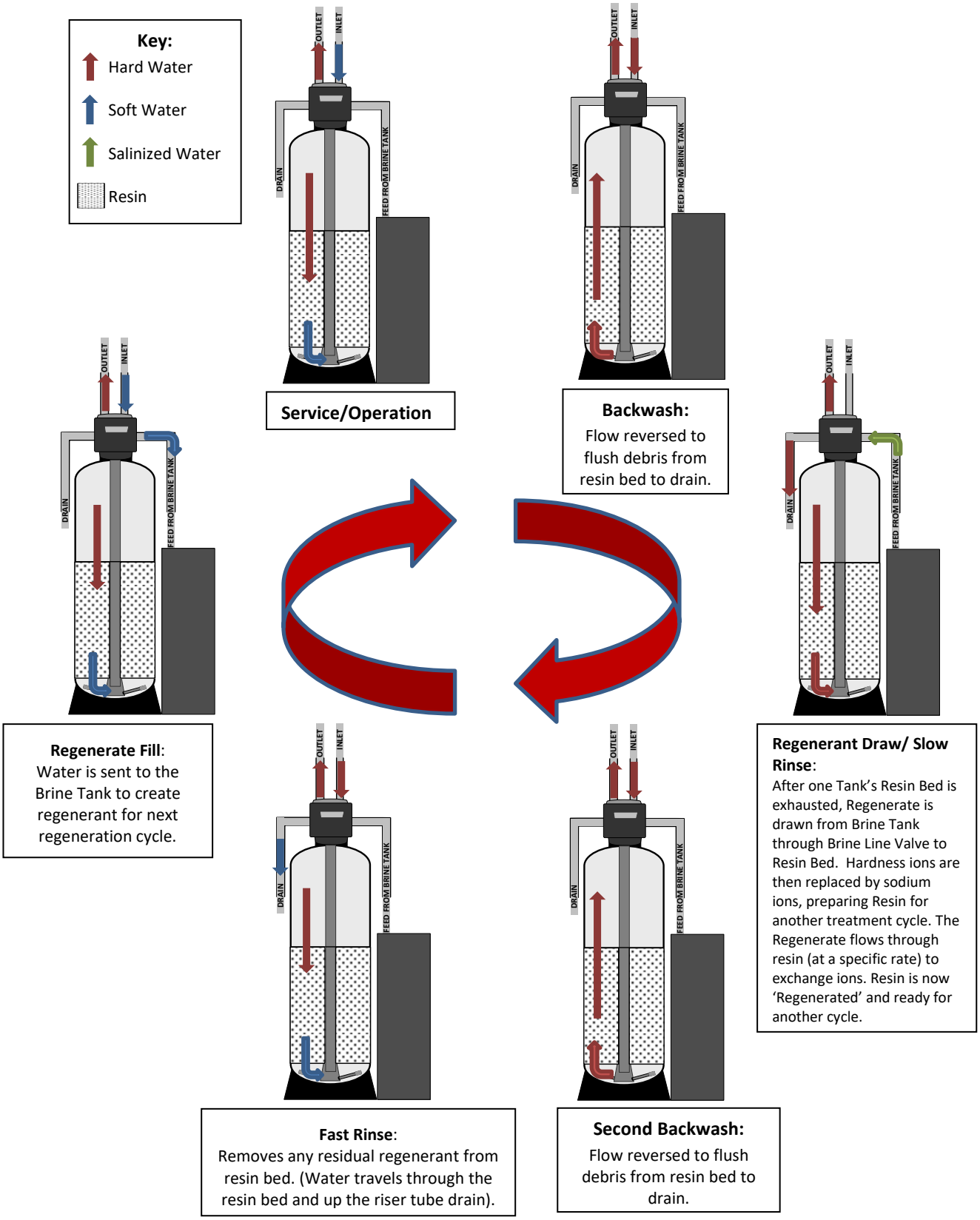

8. Program the Valve

To enter into the programming mode, press and hold the indicated buttons on the control valve for 5 seconds. For each set of settings (A-H), the display will start by showing the parameter listed as a. To go to the next parameter, press the next button on the control valve. To go back to the last parameter, press the regen button on the control valve. After you hit next on the last parameter, you will be returned to the home screen, where the clock should be displayed.

Important: All OEM softener setup settings will be entered by Diamond H2O prior to shipping. No value in these settings needs to be changed in the field. If you can't get into a certain setting, make sure the display is unlocked (Part D).

B. OEM Softener Setup Settings (Entered by Diamond H2O)

Press and Hold: **NEXT** &

a. Type of water treatment device (**Softening**/Filtering)

Softening: This device is a water softener

Filtering: This device is a filter

b. Capacity of Resin (in grains per gallon of hardness)

Default: 25,000gpg

Note: This value is dependent upon the volume of resin used and will be set by Diamond H2O.

c. Amount of Salt per Regeneration (pounds)

Default: 10.0lbs

Note: This value is dependent upon the volume of resin used and will be set by Diamond H2O.

d. Backwash length (**NORMAL**/LONGER)

Normal: The system will backwash for the preset amount of time.

Longer: The system will backwash for longer than the preset amount of time.

e. Set Volume Capacity (Gallons)

AUTO: (default) The volume capacity will be estimated by the hardness entered in installer settings.

Off: Regeneration is based on day override.

Number of Gallons (20 to 50,000): Number of gallons that will flow through the valve before regeneration. The volume capacity can be determined using the volume capacity chart on pages 14 and 15.

f. Brine Tank Refill Option (**Post**/Pre)

Post: Refill the brine tank after the final rinse.

Pre: Refill the brine tank two hours before the regeneration.

g. Set Regenerant Flow (**Down**/Up)

Down: The regenerant flows downward through the media.

Up: The regenerant flows upward through the media.

h. Set Time of Regeneration (Normal, On 0, **Normal & On 0**)

Normal: Regeneration will occur at preset time.

On 0: Regeneration will occur immediately after the volume capacity reaches 0.

Normal & On 0: Whichever comes first will initiate regeneration.

Volume Capacity	Regeneration Time Option	Day Override	Result
AUTO	NORMAL	oFF	Reserve capacity automatically estimated. Regeneration occurs when volume capacity falls below reserve capacity at the next Regen Set Time.
AUTO	NORMAL	Any number	Reserve capacity automatically estimated. Regeneration occurs at the next Regen Set Time when volume capacity fails below the reserve capacity or the specified number of days between regenerations is reached.
AUTO	on 0	oFF	Reserve capacity not automatically estimated. Regeneration occurs immediately when volume capacity reaches 0. Time of regeneration will not be allowed to be set because regeneration will always occur when capacity reaches 0.
AUTO	NORMAL on 0	oFF	Reserve capacity not automatically estimated. Regeneration occurs when volume capacity falls below the reserve capacity at the next Regen Set Time or regeneration occurs after 10 minutes of no water usage when volume capacity reaches 0.
AUTO	NORMAL on 0	Any number	Reserve capacity not automatically estimated. Regeneration occurs at the Regen Set Time when volume capacity falls below the capacity or the specified number of days between regenerations is reached or regeneration occurs after 10 minutes of no water usage when volume capacity reaches 0.

Important: All OEM softener setup settings will be entered by Diamond H2O prior to shipping. No value in these settings needs to be changed in the field. If you can't get into a certain setting, make sure the display is unlocked (Part D).

C. Installer Settings (Entered by Diamond H2O)

Press and Hold: **NEXT** & ▲

a. Hardness (in grains per gallon)

Default: 15gpg

Set to the hardness of the water you're softening. This setting is turned off if volume capacity is set directly.

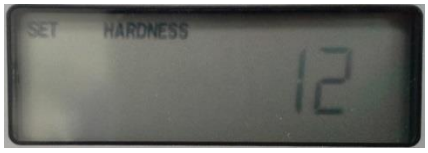

b. Day Override

Off: Regeneration is based solely on the number of gallons used.

Number of Days (1-28): Maximum number of days before regeneration.

c. Regeneration Time (Hours)

Hour (1-12): Sets what time the system will regenerate. AM/PM will toggle every 12 hours. The display will show "REGEN on 0" if "on 0" is selected.

d. Regeneration Time (Minutes)

Hour (00-60): Sets what time the system will regenerate. The display will show "REGEN on 0" if "on 0" is selected.

D. Reset Display

Press and Hold: **NEXT** & **REGEN**

E. Lock/Unlock Display

Enter the following sequence of buttons to lock/unlock the display.

▲ **-- NEXT --** ▼ **-- SET CLOCK**

F. General Operation

a. User Display One

Shows the time of day.

b. User Display Two

Shows how many gallons (or days) before regeneration OEM Softener Setup Settings.

NOTE: Display will show "REGEN TODAY" in the bottom left corner on the day that the system will regenerate. The system will then regenerate and the

G. Regeneration Mode

Once the systems starts to regenerate, the display will show which process in the regeneration cycle it is in. A diagram of the regeneration cycle is shown on page 7, which illustrates the water flow in each step.

a. Backwash (Default: 8 min) [C1]

b. Regenerant Draw (Default: 75 min) [C2/C3]

c. Backwash a second time (Default: 2x10 min) [C1]

d. Rinse (Default: 6 min) [C5]

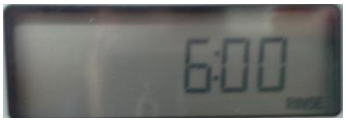

e. Fill (Default: 6.5 min) [C8]

H. Set Time of Day

Press: **SET CLOCK**

a. Set Hours

b. Set Minutes

I. Diagnostics.

Press and Hold: ▲ & ▼

a. Days Since Last Regeneration

b. Gallons Since Last Regeneration

c. Reserve capacity used for the last 7 days in gallons. First, the display will flash between showing "A-0" and the reserve capacity in gallons. "A-" means that the reserve capacity is automatically calculated and the number after "A-" represents the day.

0=today, 1=yesterday, 2=two days ago, etc.

d. Shows the number of gallons used per day for the last 63 days. Pressing the ▲ or ▼ buttons will cycle through each day for up to 63 day starting with 1 (for yesterday).

e. Current Flow Rate

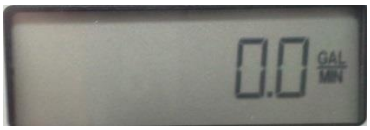

f. Maximum Flow Rate reached for the last 7 days.

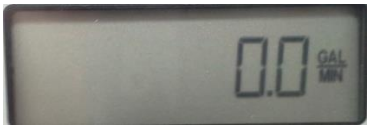

g. Total number of gallons used (since last time the system was reset).

h. Total number of days (since last time the system was reset).

i. Total number of regenerations (since last time the system was reset).

Note: To reset the diagnostic information to 0, go into the OEM Softener Setup Settings

Press and Hold: **NEXT** & ▼ then Press and Hold: ▲ & ▼

J. Valve History

Press and Hold (4s): ▲ & ▼ then Press and Hold (4s): ▲ & ▼

a. Software Version

The current version of the installed software.

b. Maximum Flow Rate (since last time the system was reset)

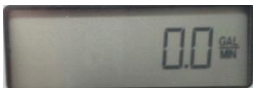

c. Total Number of Gallons Used (since last time the system was reset)

d. Total Number of Days in Operation (since last time the system was reset)

e. Total Number of Regenerations (since last time the system was reset)

f. Error Log

This display shows a history of the last 10 errors generated by the control during operation.

Pressing the ▲ or ▼ buttons will cycle through each recorded error.

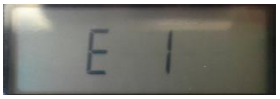

DCS6 Volume Capacity Chart (gallons)

Based on 10 lbs/ft^3 per regeneration

Default Salt Setting for Diamond H2O

	Model # DCS6-xx-																				
Hardness (gpg)	24	30	45	60	75	90	120	150	180	210	240	270	300	450	600	750	900	1200	1500	1800	2100
1	18000	24000	36000	48000	60000	72000	96000	120000	144000	168000	192000	216000	240000	360000	480000	600000	720000	960000	1200000	1440000	1680000
2	9600	12000	18000	24000	30000	36000	48000	60000	72000	84000	96000	108000	120000	180000	240000	300000	360000	480000	600000	720000	840000
3	6400	8000	12000	16000	20000	24000	32000	40000	48000	56000	64000	72000	80000	120000	160000	200000	240000	320000	400000	480000	560000
4	4800	6000	9000	12000	15000	18000	24000	30000	36000	42000	48000	54000	60000	90000	120000	150000	180000	240000	300000	360000	420000
5	3800	4800	7200	9600	12000	14400	19200	24000	28800	33600	38400	43200	48000	72000	96000	120000	144000	192000	240000	288000	336000
6	3200	4000	6000	8000	10000	12000	16000	20000	24000	28000	32000	36000	40000	60000	80000	100000	120000	160000	200000	240000	280000
7	2700	3400	5100	6800	8500	10200	13700	17100	20500	24000	27400	30800	34200	51400	68500	85700	102800	137100	171400	205700	240000
8	2400	3000	4500	6000	7500	9000	12000	15000	18000	21000	24000	27000	30000	45000	60000	75000	90000	120000	150000	180000	210000
9	2100	2600	4000	5300	6600	8000	10600	13300	16000	18600	21300	24000	26600	40000	53300	66600	80000	106600	133300	160000	186600
10	1900	2400	3600	4800	6000	7200	9600	12000	14400	16800	19200	21600	24000	36000	48000	60000	72000	96000	120000	144000	168000
11	1700	2100	3200	4300	5400	6500	8700	10900	13000	15200	17400	19600	21800	32700	43600	54500	65400	87200	109000	130900	152700
12	1600	2000	3000	4000	5000	6000	8000	10000	12000	14000	16000	18000	20000	30000	40000	50000	60000	80000	100000	120000	140000
13	1400	1800	2700	3600	4600	5500	7300	9200	11000	12900	14700	16600	18400	27600	36900	46100	55300	73800	92300	110700	129200
14	1300	1700	2500	3400	4200	5100	6800	8500	10200	12000	13700	15400	17100	25700	34200	42800	51400	68500	85700	102800	120000
15	1200	1600	2400	3200	4000	4800	6400	8000	9600	11200	12800	14400	16000	24000	32000	40000	48000	64000	80000	96000	112000
16	1200	1500	2200	3000	3700	4500	6000	7500	9000	10500	12000	13500	15000	22500	30000	37500	45000	60000	75000	90000	105000
17	1100	1400	2100	2800	3500	4200	5600	7000	8400	9800	11200	12700	14100	21100	28200	35200	42300	56400	70500	84700	98800
18	1000	1300	2000	2600	3300	4000	5300	6600	8000	9300	10600	12000	13300	20000	26600	33300	40000	53300	66600	80000	93300
19	1000	1200	1800	2500	3100	3700	5000	6300	7500	8800	10100	11300	12600	18900	25200	31500	37800	50500	63100	75700	88400
20	900	1200	1800	2400	3000	3600	4800	6000	7200	8400	9600	10800	12000	18000	24000	30000	36000	48000	60000	72000	84000
21	900	1100	1700	2200	2800	3400	4500	5700	6800	8000	9100	10200	11400	17100	22800	28500	34200	45700	57100	68500	80000
22	800	1000	1600	2100	2700	3200	4300	5400	6500	7600	8700	9800	10900	16300	21800	27200	32700	43600	54500	65400	76300
23	800	1000	1500	2000	2600	3100	4100	5200	6200	7300	8300	9300	10400	15600	20800	26000	31300	41700	52100	62600	73000
24	800	1000	1500	2000	2500	3000	4000	5000	6000	7000	8000	9000	10000	15000	20000	25000	30000	40000	50000	60000	70000
25	700	900	1400	1900	2400	2800	3800	4800	5700	6700	7600	8600	9600	14400	19200	24000	28800	38400	48000	57600	67200
26	700	900	1300	1800	2300	2700	3600	4600	5500	6400	7300	8300	9200	13800	18400	23000	27600	36900	46100	55300	64600
27	700	800	1300	1700	2200	2600	3500	4400	5300	6200	7100	8000	8800	13300	17700	22200	26600	35500	44400	53300	62200
28	600	800	1200	1700	2100	2500	3400	4200	5100	6000	6800	7700	8500	12800	17100	21400	25700	34200	42800	51400	60000
29	600	800	1200	1600	2000	2400	3300	4100	4900	5700	6600	7400	8200	12400	16500	20600	24800	33100	41300	49600	57900
30	600	800	1200	1600	2000	2400	3200	4000	4800	5600	6400	7200	8000	12000	16000	20000	24000	32000	40000	48000	56000
31	600	700	1100	1500	1900	2300	3000	3800	4600	5400	6100	6900	7700	11600	15400	19300	23200	30900	38700	46400	54100
32	600	700	1100	1500	1800	2200	3000	3700	4500	5200	6000	6700	7500	11200	15000	18700	22500	30000	37500	45000	52500
33	500	700	1000	1400	1800	2100	2900	3600	4300	5000	5800	6500	7200	10900	14500	18100	21800	29000	36300	43600	50900
34	500	700	1000	1400	1700	2100	2800	3500	4200	4900	5600	6300	7000	10500	14100	17600	21100	28200	35200	42300	49400
35	500	600	1000	1300	1700	2000	2700	3400	4100	4800	5400	6100	6800	10200	13700	17100	20500	27400	34200	41100	48000
36	500	600	1000	1300	1600	2000	2600	3300	4000	4600	5300	6000	6600	10000	13300	16600	20000	26600	33300	40000	46600
37	500	600	900	1200	1600	1900	2500	3200	3800	4500	5100	5800	6400	9700	12900	16200	19400	25900	32400	38900	45400
38	500	600	900	1200	1500	1800	2500	3100	3700	4400	5000	5600	6300	9400	12600	15700	18900	25200	31500	37800	44200
39	400	600	900	1200	1500	1800	2400	3000	3600	4300	4900	5500	6100	9200	12300	15300	18400	24600	30700	36900	43000
40	400	600	900	1200	1500	1800	2400	3000	3600	4200	4800	5400	6000	9000	12000	15000	18000	24000	30000	36000	42000
41	400	500	800	1100	1400	1700	2300	2900	3500	4000	4600	5200	5800	8700	11700	14600	17500	23400	29200	35100	40900
42	400	500	800	1100	1400	1700	2200	2800	3400	4000	4500	5100	5700	8500	11400	14200	17100	22800	28500	34200	40000

For Example, a DCS6-240-300 softening 20gpg water would have a volume capacity of 9,600 gallons

DCS6 Volume Capacity Chart (gallons)

Based on 15 lbs/ft^3 per regeneration

	Model # DCS6-xx-																				
Hardness (gpg)	24	30	45	60	75	90	120	150	180	210	240	270	300	450	600	750	900	1200	1500	1800	2100
1	24000	30000	45000	600000	75000	90000	120000	150000	180000	210000	240000	270000	300000	450000	600000	750000	900000	1200000	1500000	1800000	2100000
2	12000	15000	22500	300000	37500	45000	60000	75000	90000	105000	120000	135000	150000	225000	300000	375000	450000	600000	750000	900000	1050000
3	8000	10000	15000	200000	25000	30000	40000	50000	60000	70000	80000	90000	100000	150000	200000	250000	300000	400000	500000	600000	700000
4	6000	7500	11200	150000	18700	22500	30000	37500	45000	52500	60000	67500	75000	112500	150000	187500	225000	300000	375000	450000	525000
5	4800	6000	9000	120000	15000	18000	24000	30000	36000	42000	48000	54000	60000	90000	120000	150000	180000	240000	300000	360000	420000
6	4000	5000	7500	100000	12500	15000	20000	25000	30000	35000	40000	45000	50000	75000	100000	125000	150000	200000	250000	300000	350000
7	3400	4200	6400	85700	10700	12800	17100	21400	25700	30000	34200	38500	42800	64200	85700	107100	128500	171400	214200	257100	300000
8	3000	3700	5600	75000	9300	11200	15000	18700	22500	26200	30000	33700	37500	56200	75000	93700	112500	150000	187500	225000	262500
9	2600	3300	5000	66600	8300	10000	13300	16600	20000	23300	26600	30000	33300	50000	66600	83300	100000	133300	166600	200000	233300
10	2400	3000	4500	60000	7500	9000	12000	15000	18000	21000	24000	27000	30000	45000	60000	75000	90000	120000	150000	180000	210000
11	2100	2700	4000	54500	6800	8100	10900	13600	16300	19000	21800	24500	27200	40900	54500	68100	81800	109000	136300	163600	190900
12	2000	2500	3700	50000	6200	7500	10000	12500	15000	17500	20000	22500	25000	37500	50000	62500	75000	100000	125000	150000	175000
13	1800	2300	3400	46100	5700	6900	9200	11500	13800	16100	18400	20700	23000	34600	46100	57600	69200	92300	115300	138400	161500
14	1700	2100	3200	42800	5300	6400	8500	10700	12800	15000	17100	19200	21400	32100	42800	53500	64200	85700	107100	128500	150000
15	1600	2000	3000	40000	5000	6000	8000	10000	12000	14000	16000	18000	20000	30000	40000	50000	60000	80000	100000	120000	140000
16	1500	1800	2800	37500	4600	5600	7500	9300	11200	13100	15000	16800	18700	28100	37500	46800	56200	75000	93700	112500	131200
17	1400	1700	2600	35200	4400	5200	7000	8800	10500	12300	14100	15800	17600	26400	35200	44100	52900	70500	88200	105800	123500
18	1300	1600	2500	33300	4100	5000	6600	8300	10000	11600	13300	15000	16600	25000	33300	41600	50000	66600	83300	100000	116600
19	1200	1500	2300	31500	3900	4700	6300	7800	9400	11000	12600	14200	15700	23600	31500	39400	47300	63100	78900	94700	110500
20	1200	1500	2200	30000	3700	4500	6000	7500	9000	10500	12000	13500	15000	22500	30000	37500	45000	60000	75000	90000	105000
21	1100	1400	2100	28500	3500	4200	5700	7100	8500	10000	11400	12800	14200	21400	28500	35700	42800	57100	71400	85700	100000
22	800	1000	1600	2100	2700	3200	4300	5400	6500	7600	8700	9800	10900	16300	21800	27200	32700	43600	54500	65400	76300
23	800	1000	1500	2000	2600	3100	4100	5200	6200	7300	8300	9300	10400	15600	20800	26000	31300	41700	52100	62600	73000
24	800	1000	1500	2000	2500	3000	4000	5000	6000	7000	8000	9000	10000	15000	20000	25000	30000	40000	50000	60000	70000
25	700	900	1400	1900	2400	2800	3800	4800	5700	6700	7600	8600	9600	14400	19200	24000	28800	38400	48000	57600	67200
26	700	900	1300	1800	2300	2700	3600	4600	5500	6400	7300	8300	9200	13800	18400	23000	27600	36900	46100	55300	64600
27	700	800	1300	1700	2200	2600	3500	4400	5300	6200	7100	8000	8800	13300	17700	22200	26600	35500	44400	53300	62200
28	600	800	1200	1700	2100	2500	3400	4200	5100	6000	6800	7700	8500	12800	17100	21400	25700	34200	42800	51400	60000
29	600	800	1200	1600	2000	2400	3300	4100	4900	5700	6600	7400	8200	12400	16500	20600	24800	33100	41300	49600	57900
30	600	800	1200	1600	2000	2400	3200	4000	4800	5600	6400	7200	8000	12000	16000	20000	24000	32000	40000	48000	56000
31	600	700	1100	1500	1900	2300	3000	3800	4600	5400	6100	6900	7700	11600	15400	19300	23200	30900	38700	46400	54100
32	600	700	1100	1500	1800	2200	3000	3700	4500	5200	6000	6700	7500	11200	15000	18700	22500	30000	37500	45000	52500
33	500	700	1000	1400	1800	2100	2900	3600	4300	5000	5800	6500	7200	10900	14500	18100	21800	29000	36300	43600	50900
34	500	700	1000	1400	1700	2100	2800	3500	4200	4900	5600	6300	7000	10500	14100	17600	21100	28200	35200	42300	49400
35	500	600	1000	1300	1700	2000	2700	3400	4100	4800	5400	6100	6800	10200	13700	17100	20500	27400	34200	41100	48000
36	500	600	1000	1300	1600	2000	2600	3300	4000	4600	5300	6000	6600	10000	13300	16600	20000	26600	33300	40000	46600
37	500	600	900	1200	1600	1900	2500	3200	3800	4500	5100	5800	6400	9700	12900	16200	19400	25900	32400	38900	45400
38	500	600	900	1200	1500	1800	2500	3100	3700	4400	5000	5600	6300	9400	12600	15700	18900	25200	31500	37800	44200
39	400	600	900	1200	1500	1800	2400	3000	3600	4300	4900	5500	6100	9200	12300	15300	18400	24600	30700	36900	43000
40	400	600	900	1200	1500	1800	2400	3000	3600	4200	4800	5400	6000	9000	12000	15000	18000	24000	30000	36000	42000
41	400	500	800	1100	1400	1700	2300	2900	3500	4000	4600	5200	5800	8700	11700	14600	17500	23400	29200	35100	40900
42	400	500	800	1100	1400	1700	2200	2800	3400	4000	4500	5100	5700	8500	11400	14200	17100	22800	28500	34200	40000

For Example, a DCS6-240-300 softening 20gpg water would have a volume capacity of 12,000 gallons

9. System Specifications

1.0" Patriot - System Specifications

MODEL (T1 or T2)	CAPACITY & SALT per REGENERATION				FLOW RATE (GPM)			SOFTENER TANK(S)		BRINE TANK (With Grid)		PLUMBING	
(T1: 1-Tank Softener)	MAXIMUM		MINIMUM		CONT.	PEAK	BACKWASH	DIMEN's	CAPACITY	DIMEN's	CAPACITY	SERVICE	DRAIN
(T2: 2-Tank Softener)	Capacity	Salt/Regen	Capacity	Salt/Regen	@15psi Drop	@25psi Drop	n/a	Dia x Ht (in)	Cu Ft	Dia x Ht (in)	Lbs.	Inches	Inches
DCS6-24-100	24,000	12 lb	18,000	8lb	13	20	1.7	8 x 44	0.75	18 x 33	300	1	¾
DCS6-30-100	30,000	15 lb	24,000	10lb	15	22	2.2	9 x 48	1	18 x 33	300	1	¾
DCS6-45-100	45,000	22.5 lb	36,000	15lb	15	22	2.7	10 x 54	1.5	18 x 40	400	1	¾
DCS6-60-100	60,000	30 lb	48,000	20lb	18	25	3.2	12 x 52	2	18 x 40	400	1	¾
DCS6-75-100	75,000	37.5 lb	60,000	25lb	19	26	4.2	13 x 54	2.5	18 x 40	400	1	¾
DCS6-90-100	90,000	45 lb	72,000	30lb	19	26	5.3	14 x 65	3	24 x 50	900	1	¾

1.0" Patriot - System Footprint & Shipping Weights

MODEL	(T1) 1-TANK System		(T2) 2-TANK System	
(T1: 1-Tank System)	FOOTPRINT	SHIPPING WEIGHT	FOOTPRINT	SHIPPING WEIGHT
(T2: 2-Tank System)	L" x W" x H"	lbs	L" x W" x H"	lbs
DCS6-24-100	32 x 18 x 52	76	46 x 18 x 52	129
DCS6-30-100	33 x 18 x 56	91	48 x 18 x 56	160
DCS6-45-100	34 x 18 x 62	128	50 x 18 x 62	230
DCS6-60-100	36 x 18 x 60	160	54 x 18 x 60	295
DCS6-75-100	37 x 18 x 62	213	56 x 18 x 62	401
DCS6-90-100	44 x 24 x 73	358	64 x 24 x 73	578

Shipping Codes

Product	Code
Entire System	77.5
Resin Tank/Brine Tank	77.5
Control Valves	77.5
Gravel	50
Resin	55

1.25" Patriot - System Specifications

MODEL (T1 or T2)	CAPACITY & SALT per REGENERATION				FLOW RATE (GPM)			SOFTENER TANK(S)		BRINE TANK (With Grid)		PLUMBING	
(T1: 1-Tank Softener)	MAXIMUM		MINIMUM		CONT.	PEAK	BACKWASH	DIMEN's	CAPACITY	DIMEN's	CAPACITY	SERVICE	DRAIN
(T2: 2-Tank Softener)	Capacity	Salt/Regen	Capacity	Salt/Regen	@15psi Drop	@25psi Drop	n/a	Dia x Ht (in)	Cu Ft	Dia x Ht (in)	Lbs.	Inches	Inches
DCS6-24-125	24,000	12 lb	19,200	8lb	14	23	1.7	8 x 44	0.8	18 x 33	300	1 ¼	¾
DCS6-30-125	30,000	15 lb	24,000	10lb	17	26	2.2	9 x 48	1	18 x 33	300	1 ¼	¾
DCS6-45-125	45,000	22.5 lb	36,000	15lb	18	27	2.7	10 x 54	1.5	18 x 40	400	1 ¼	¾
DCS6-60-125	60,000	30 lb	48,000	20lb	22	31	3.2	12 x 52	2	18 x 40	400	1 ¼	¾
DCS6-75-125	75,000	37.5 lb	60,000	25lb	23	32	4.2	13 x 54	2.5	18 x 40	400	1 ¼	¾
DCS6-90-125	90,000	45 lb	72,000	30lb	23	32	5.3	14 x 65	3	24 x 50	900	1 ¼	¾
DCS6-120-125	120,000	60 lb	96,000	40lb	25	34	6.5	16 x 65	4	24 x 50	300	1 ¼	¾
DCS6-150-125	150,000	75 lb	120,000	50lb	26	35	9	18 x 65	5	24 x 50	300	1 ¼	¾
DCS6-180-125	180,000	90 lb	144,000	60lb	28	37	12	18 x 65	6	24 x 50	400	1 ¼	1

1.25" Patriot - System Footprint & Shipping Weights

MODEL	(T1) 1-TANK System		(T2) 2-TANK System	
(T1: 1-Tank System)	FOOTPRINT	SHIPPING WEIGHT	FOOTPRINT	SHIPPING WEIGHT
(T2: 2-Tank System)	L" x W" x H"	lbs	L" x W" x H"	lbs
DCS6-24-125	32 x 18 x 52	76	46 x 18 x 52	129
DCS6-30-125	33 x 18 x 56	91	48 x 18 x 56	160
DCS6-45-125	34 x 18 x 62	128	50 x 18 x 62	230
DCS6-60-125	36 x 18 x 60	160	54 x 18 x 60	295
DCS6-75-125	37 x 18 x 62	213	56 x 18 x 62	401
DCS6-90-125	44 x 24 x 73	358	64 x 24 x 73	578
DCS6-120-125	46 x 24 x 73	442	68 x 24 x 73	747
DCS6-150-125	48 x 24 x 73	544	72 x 24 x 73	951
DCS6-180-125	48 x 24 x 73	595	72 x 24 x 73	1053

Shipping Codes

Product	Code
Entire System	77.5
Resin Tank/Brine Tank	77.5
Control Valves	77.5
Gravel	50
Resin	55

10. Troubleshooting

Problem	Possible Cause	Solution
No Display on PC Board	No power at electric outlet	Repair outlet or use working outlet
	Control valve power adapter not plugged into outlet or power cord end not connected to PC board connection	Verify that cord is plugged in and that proper voltage is being delivered to PC board connection
	Improper power supply	Verify proper voltage is being delivered to PC board
	Defective power adapter	Replace Power Adapter
	Defective PC Board	Replace PC Board
PC Board does not display correct time of day	Power Adapter Plugged into electric outlet controlled by light switch	Use uninterrupted outlet
	Tripped breaker switch and/ or GFI switch	Reset breaker switch and/ or GFI switch
	Power outage	Reset time of day. If PC board has battery back-up present, the battery may be depleted. See page 12 for instructions on how to change the time. Replace the battery.
	Defective PC board	Replace PC Board, reprogram PC Board
Display does not indicate that water is flowing. Refer to instructions for how the display indicates water is flowing (pg 13)	Bypass valve in bypass position (Figure 23)	Turn bypass handles to place bypass in service position
	Meter is not connected to meter connection on PC board	Connect meter to three pin connection labeled METER on PC board
	Restricted/stalled meter turbine	Remove meter and check for rotation or foreign material
	Meter cable wires are not installed securely into three pin connector	Verify meter cable wires are installed securely into three pin connector labeled METER
	Defective meter	Replace meter
	Defective PC Board	Replace PC Board, reprogram PC Board
Control valve regenerates at wrong time of day	Power outage	Reset time of day. If PC board has battery back-up present, the battery may be depleted. See front cover and drive assembly drawing for instructions.
	Time of day not set correctly	Reset to correct time of day
	Time of regeneration set incorrectly	Reset regeneration time
	Control valve set at “on 0” (immediate regeneration)	Check programming setting and reset to dELy (for a delayed regen time)
	Control valve set at “dELy” (delayed and/or immediate)	Check programming setting and reset to NORMAL (for a delayed regen time)

10. Troubleshooting (2)

Problem	Possible Cause	Solution
Time of day flashes on and off	Power outage	Reset time of day. If PC board has battery back-up present, the battery may be depleted. See page 12 for instructions on how to change the time. Replace the battery.
Control valve does not regenerate automatically when the REGEN button is depressed and held.	Broken drive gear or drive cap assembly	Replace drive gear or drive cap assembly
	Broken Piston Rod	Replace piston rod
	Defective PC Board	Replace PC Board
Control valve does not regenerate automatically but does when the REGEN button is depressed and held.	Bypass valve in bypass position	Turn bypass handles to place bypass in service position
	Meter is not connected to meter connection on PC board	Connect meter to three pin connection labeled METER on PC board
	Restricted/stalled meter turbine	Remove meter and check for rotation or foreign material
	Incorrect programming	Check for programming error
	Meter cable wires are not installed securely into three pin connector	Verify meter cable wires are installed securely into three pin connector labeled METER
	Defective meter	Replace meter
	Defective PC Board	Replace PC Board
Hard or untreated water is being delivered	Bypass valve is open or faulty	Fully close bypass valve or replace
	Media is exhausted due high water usage.	Check program settings or diagnostics for abnormal water usage
	Meter not registering	Remove meter and check for rotation or foreign materials
	Water quality fluctuation	Test water and adjust program values accordingly
	No or low level of salt in brine tank	Add proper amount of salt to tank
	Control valve fails to draw in brine	Refer to pg. 23.
	Insufficient water level in brine tank	Check refill setting in programming. Check refill flow control for restrictions or debris and clean or replace
	Damage seal/stack assembly	Replace seal/stack assembly
	Control valve body type and piston type mix matched	Verify proper control valve body type and piston type match
	Fouled resin	Replace resin

10. Troubleshooting (3)

Problem	Possible Cause	Solution
Control valve uses too much brine	Improper refill settings	Check refill settings (7.A)
	Improper program settings	Check program setting to make sure they are specific to the water quality and application needs
	Control valve regenerates frequently	Check for leaking fixtures that may be exhausting capacity or system is undersized
Residual salt is being delivered to service	Low waste pressure	Check incoming water pressure. Water pressure must remain at minimum of 25 psi
	Incorrect injector size	Replace injector with correct size for the application
	Restricted drain line	Check drain line for restriction or debris and clean
Excessive water in brine tank	Improper program settings	Check refill setting
	Plugged injector	Remove injector and clean or replace
	Drive cap assembly not tightened in properly	Re-tighten the drive cap assembly
	Damaged seal/stack assembly	Replace seal/stack
	Restricted or kinked drain line	Check drain line for restrictions or debris and or un-kink drain line
	Plugged backwash flow controller	Remove backwash flow controller and clean or replace
	Missing refill flow controller	Replace refill flow controller
Control valve fails to draw in brine	Injector is plugged	Remove injector and clean or replace
	Faulty regenerant piston	Replace regenerant piston
	Brine line connection leak	Inspect brine line for air leak
	Drain line restriction or debris cause excess back pressure	Inspect drain line and clean to correct restriction
	Drain line too long or too high	Shorten length or height
	Low water pressure	Check incoming water pressure. Water pressure must remain at minimum of 25 psi
Water running to drain	Power outage during regeneration	Upon power being restored control will finish the remaining regeneration time. Reset time of day. If PC board has battery back-up present the battery may be depleted. See Front Cover and Drive Assembly drawing for instructions
	Damage seal/stack assembly	Replace seal/stack assembly
	Piston assembly failure	Replace piston assembly
	Drive cap assembly not tightened properly	Re-tighten the drive cap assembly

11. Control Error Codes

Problem	Possible Cause	Solution
E1, Err-1001, Err-101 = **Control unable to sense motor movement**	Motor not inserted full to engage pinion, motor wires broken or disconnected	Disconnect power, make sure motor is fully engaged, check for broken wires, and make sure two-pin connector on motor is connected to the two pin connection on the PC board labeled MOTOR. Press NEXT and REGEN buttons for 3 seconds to resynchronize software with piston position or disconnect power supply from PC board for 5 seconds and then reconnect.
	PC board not properly snapped into drive bracket	Properly snap PC board into drive bracket and then press NEXT and REGEN buttons for 3 seconds to resynchronize software with piston position or disconnect power supply from PC board for 5 seconds and then reconnect.
	Missing reduction gears	Replace missing gears
E2, Err-1002, Err-102 = **Control valve motor ran too short and was unable to find the next cycle position and stalled**	Foreign material is lodged in control valve	Open up control valve and pull out piston assembly and seal/stack assembly for inspection. Press NEXT and REGEN buttons for 3 seconds to resynchronize software with piston position or disconnect power supply from PC board for 5 seconds and then reconnect.
	Mechanical binding	Check piston assembly and seal/stack assembly, check reduction gears, check drive bracket and main drive gear interface. Press NEXT and REGEN buttons for 3 seconds to resynchronize software with piston position or disconnect power supply from PC board for 5 seconds and then reconnect.
	Main drive gear too tight	Loosen main drive gear. Press NEXT and REGEN buttons for 3 seconds to resynchronize software with piston position or disconnect power supply from PC board for 5 seconds and then reconnect.
	Improper voltage being delivered to PC board	Verify that proper voltage is being supplied. Press NEXT and REGEN buttons for 3 seconds to resynchronize software with piston position or disconnect power supply from PC board for 5 seconds and then reconnect.

11. Control Error Codes (2)

Problem	Possible Cause	Solution
E3, Err-1003, Err-103 = **Control valve motor ran too long and was unable to find the next cycle position and stalled**	Motor failure during a regeneration	Check motor connections. Press NEXT and REGEN buttons for 3 seconds to resynchronize software with piston position or disconnect power supply from PC board for 5 seconds and then reconnect.
	Foreign material built up on piston and stack assemblies creating friction and drag enough to time out motor	Replace piston and seal/stack assemblies. Press NEXT and REGEN buttons for 3 seconds to resynchronize software with piston position or disconnect power supply from PC board for 5 seconds and then reconnect.
	Drive bracket not snapped in properly that reduction gears and drive gear do not interface	Snap drive bracket in properly. Press NEXT and REGEN buttons for 3 seconds to resynchronize software with piston position or disconnect power supply from PC board for 5 seconds and then reconnect.
E4, Err-1004, Err-104 = **Control valve motor ran too long and timed out trying to reach home position**	Drive bracket not snapped in properly that reduction gears and drive gear do not interface	Snap drive bracket in properly. Press NEXT and REGEN buttons for 3 seconds to resynchronize software with piston position or disconnect power supply from PC board for 5 seconds and then reconnect.
Err-1006, Err-106, Err-116 = **MAV/SEPS/NHBP/AUX MAV valve motor ran too long and unable to find the proper park position.** **MAV = Motorized Alternating Valve** **SEPS = Separate Source** **NHBP = No Hard Water Bypass** **AUX MAV = Auxiliary MAV**	Control valve programmed for ALT A or B, NHBP, SEPS, or AUX MAV without having a MAV or NHBP valve attached to operate that function	Press NEXT and REGEN buttons for 3 seconds to resynchronize software with piston position or disconnect power supply from PC board for 5 seconds and then reconnect.
	MAV/NHBP motor wire not connected to PC board	Connect MAV/NHBP motor to PC board two-pin connection labeled DRIVE. Press NEXT and REGEN buttons for 3 seconds to resynchronize software with piston position or disconnect power supply from PC board for 5 seconds and then reconnect.
	MAV/NHBP motor not fully engaged with reduction gears	Press NEXT and REGEN buttons for 3 seconds to resynchronize software with piston position or disconnect power supply from PC board for 5 seconds and then reconnect.
	Foreign material built up on piston and stack assemblies creating friction and drag enough to time out motor	Replace piston and seal/stack assemblies. Press NEXT and REGEN buttons for 3 seconds to resynchronize software with piston position or disconnect power supply from PC board for 5 seconds and then reconnect.

11. Control Error Codes (3)

Problem	Possible Cause	Solution
Err-1007, Err-107, Err-117 **= MAV/SEPS/NHBP/AUX MAV valve motor ran too short (stalled) while looking the proper park position.** **MAV = Motorized Alternating Valve** **SEPS = Separate Source** **NHBP = No Hard Water Bypass** **AUX MAV = Auxiliary MAV**	Foreign material is lodged in MAV/NHBP valve	Check motor connections. Press NEXT and REGEN buttons for 3 seconds to resynchronize software with piston position or disconnect power supply from PC board for 5 seconds and then reconnect.
	Mechanical binding	Check piston and seal/stack assemblies, check reduction gears, drive gear interface and check MAV/NHBP black drive pinion on motor for jammed into motor body. Press NEXT and REGEN buttons for 3 seconds to resynchronize software with piston position or disconnect power supply from PC board for 5 seconds and then reconnect.